CONOR CHRISTENSEN, SAGE FORD, FAYE LEVERMAN, SPENCER WRIGHT

HP TILT-A-TABLE

INTRODUCTION

PROBLEM SUMMARY

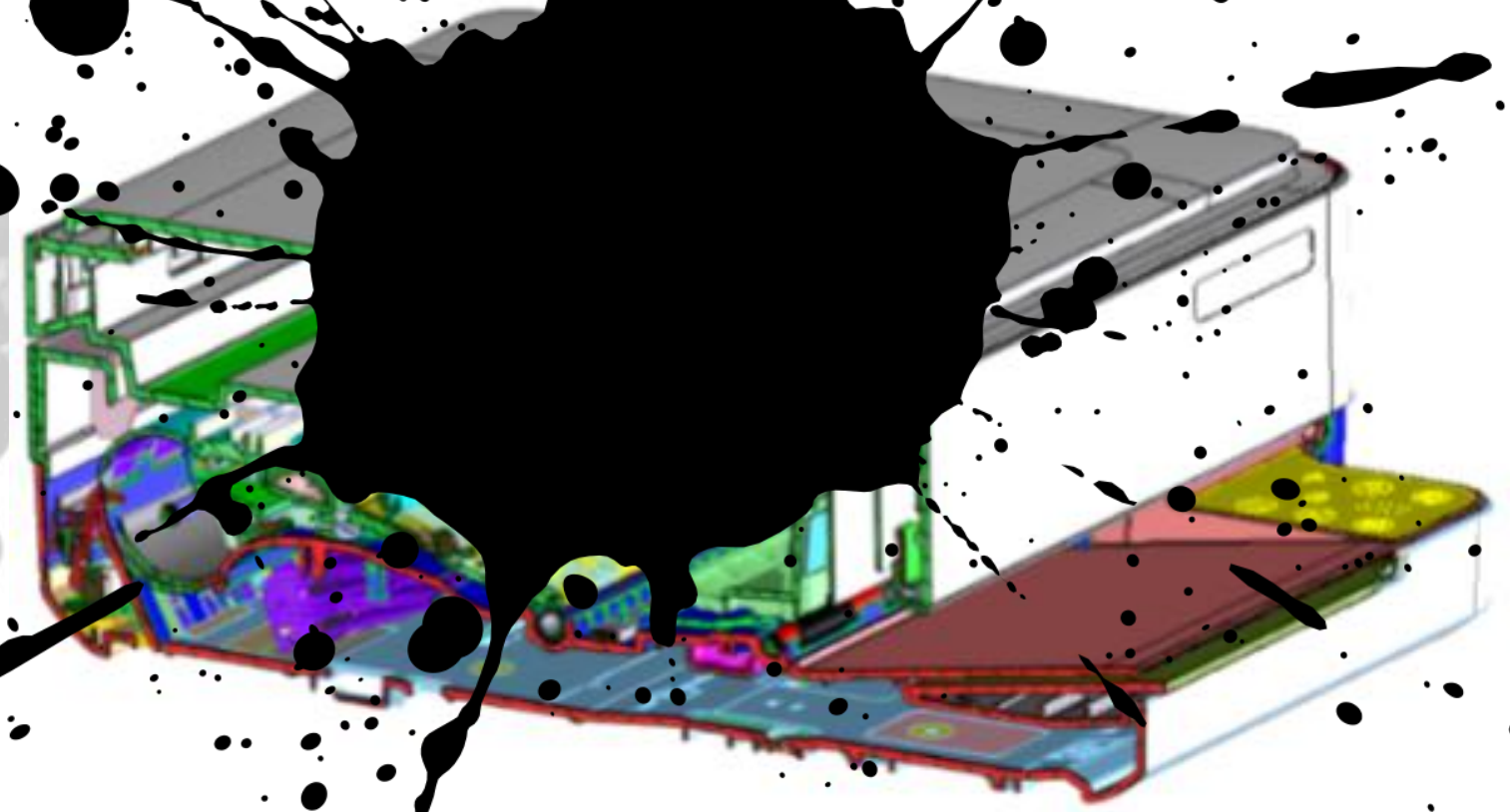

PROBLEM SUMMARY

- Replace the use of paper/temporary supports
- Device to tilt printer and ink assembly
- Provide accurate and precise measurements of tilt

REQUIREMENTS

- Dimensional accuracy within ±1 degree
- Repeatability of any angle
- Able to statically hold +25lb at any angle

DELIVERABLES

- Final Table Design
- Clamp Design
- BOM, CAD, other Documentation

TIMELINE

HP Smart Tank Printer Tilt Table Project

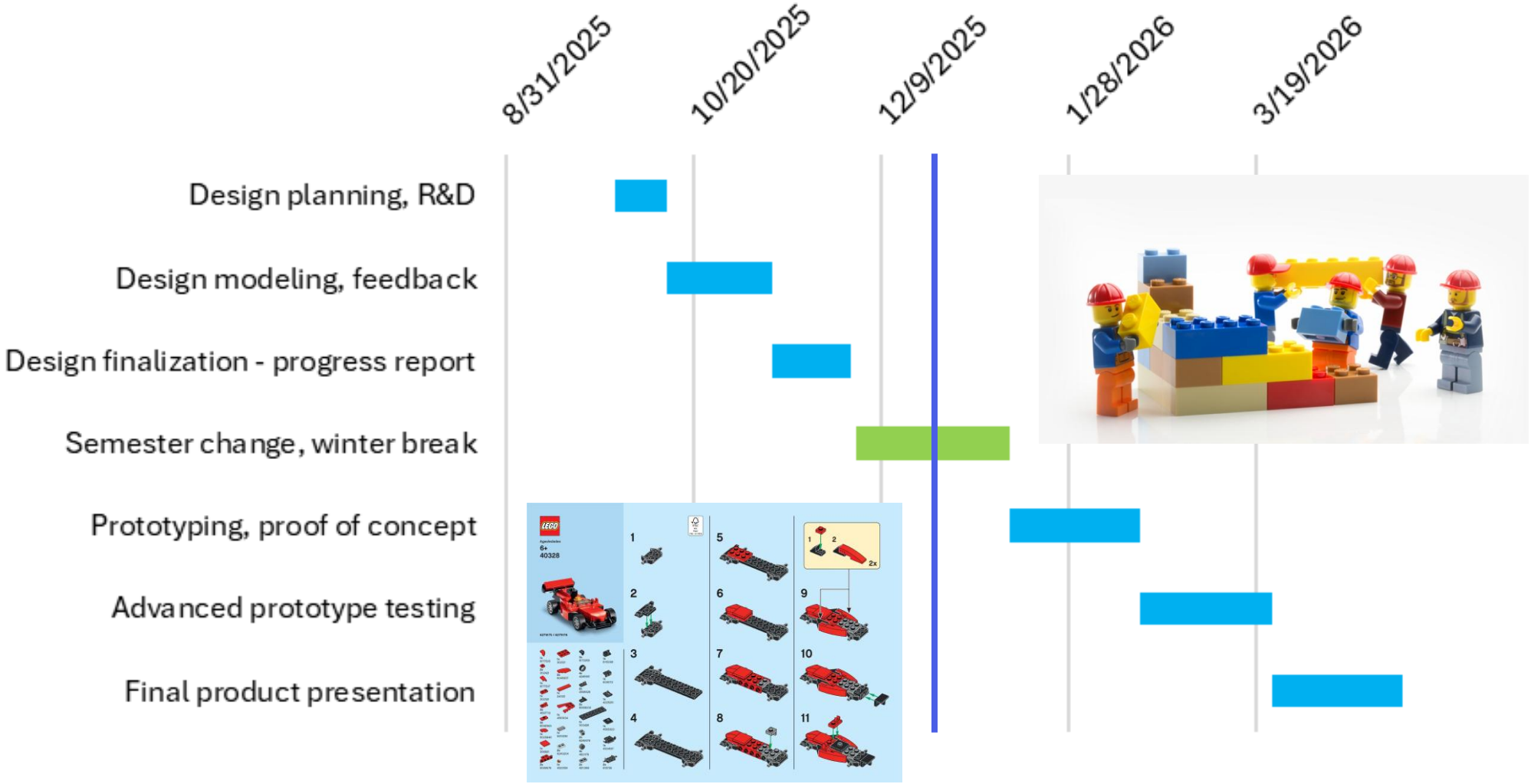

METHODOLOGY

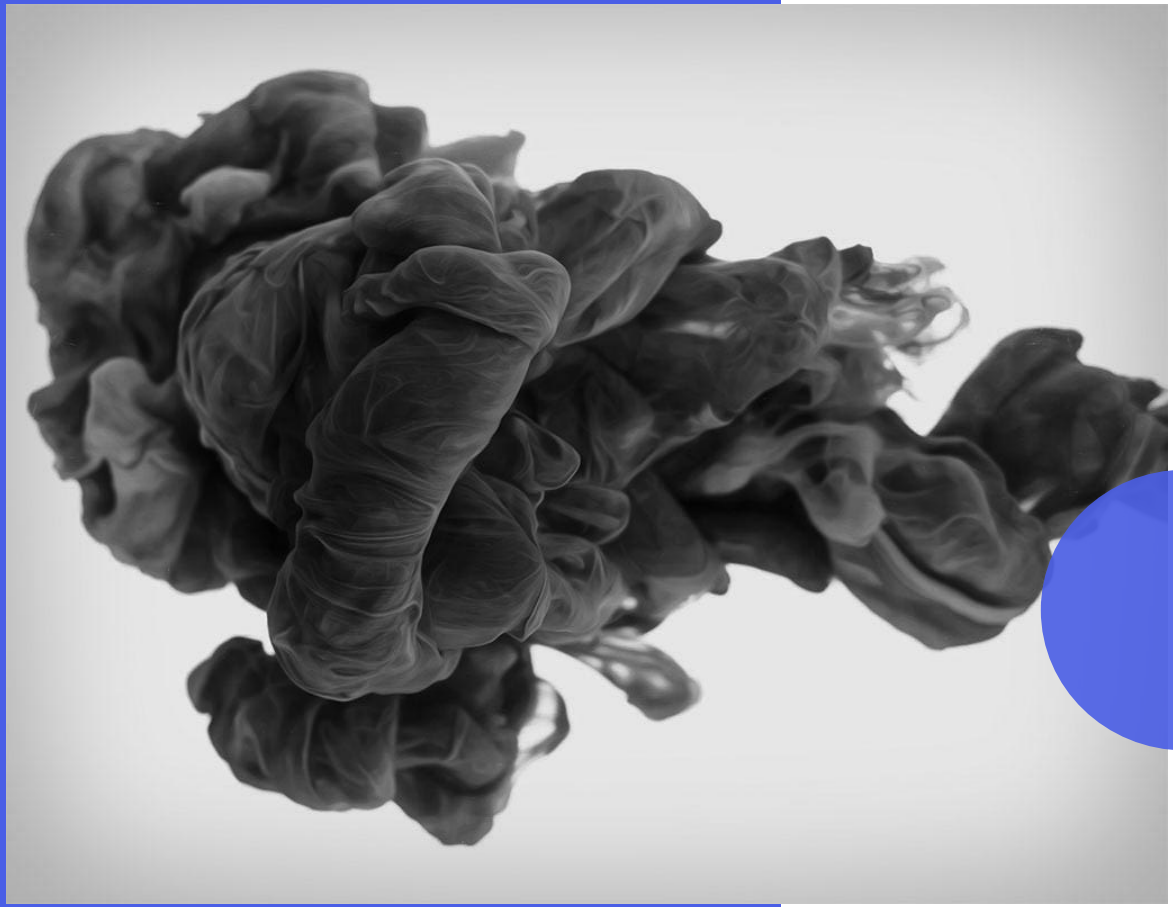

INITIAL IDEAS

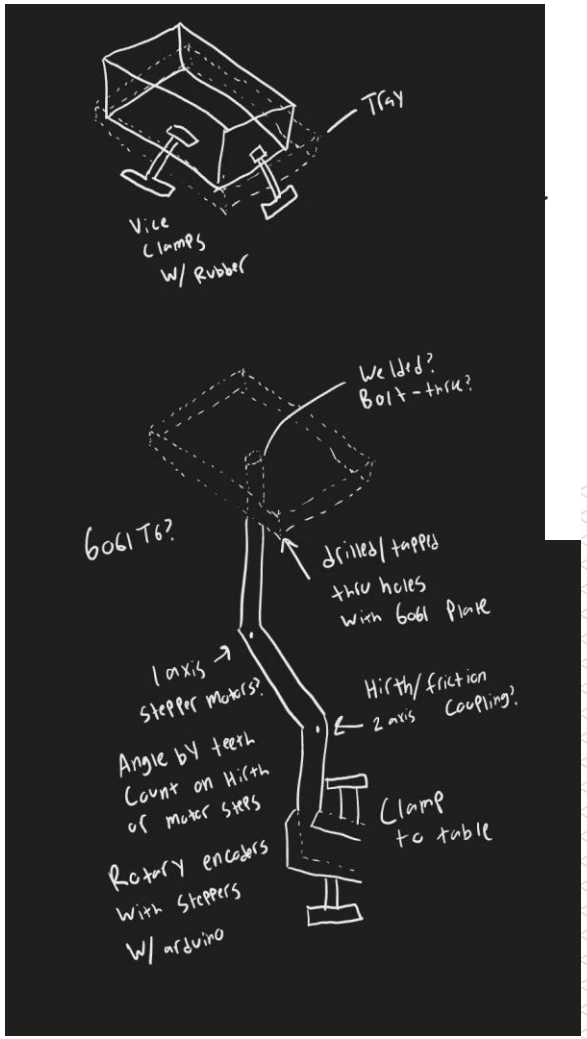

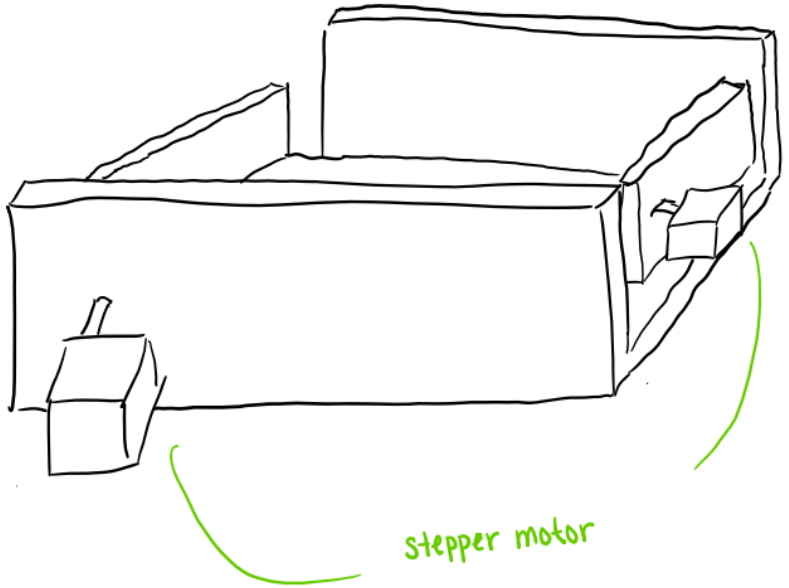

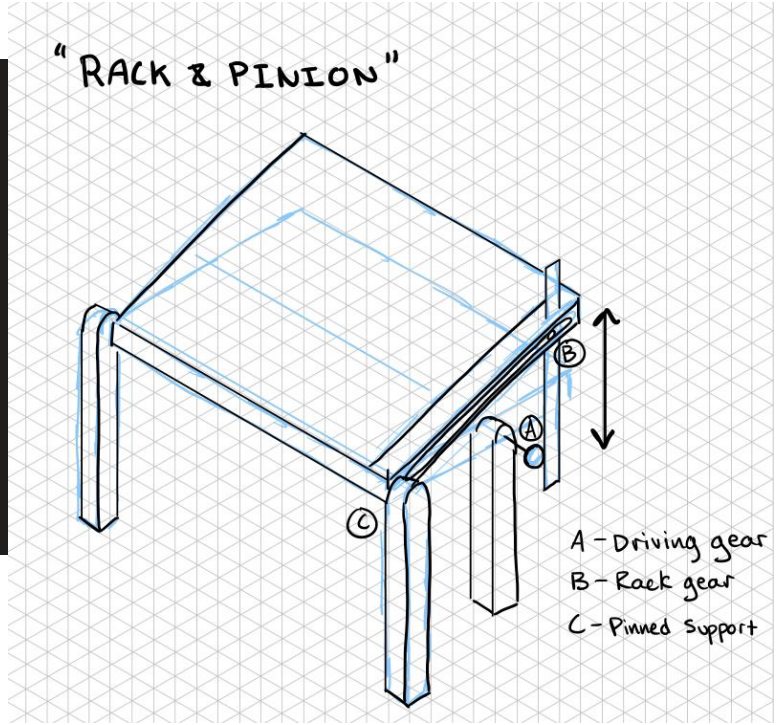

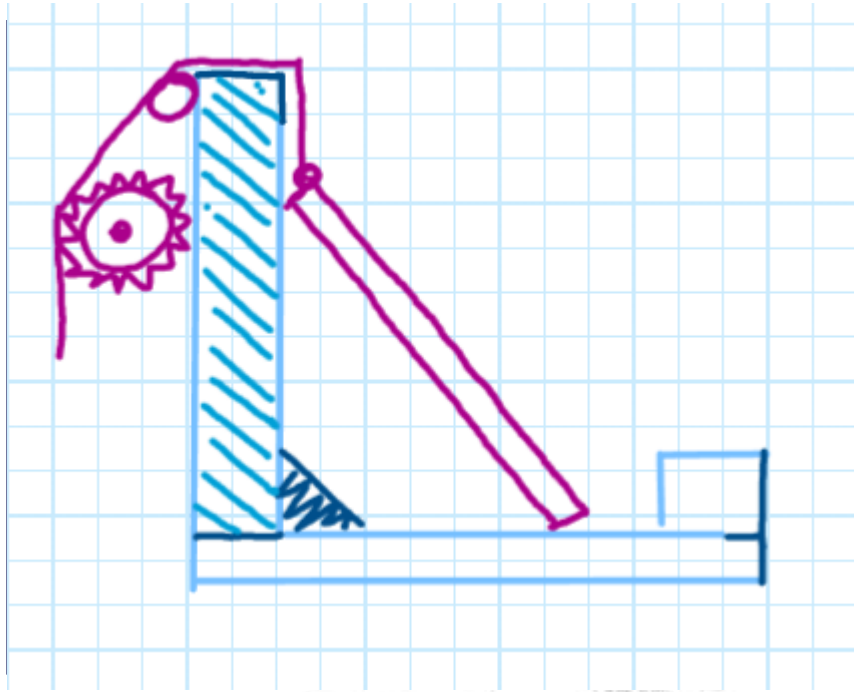

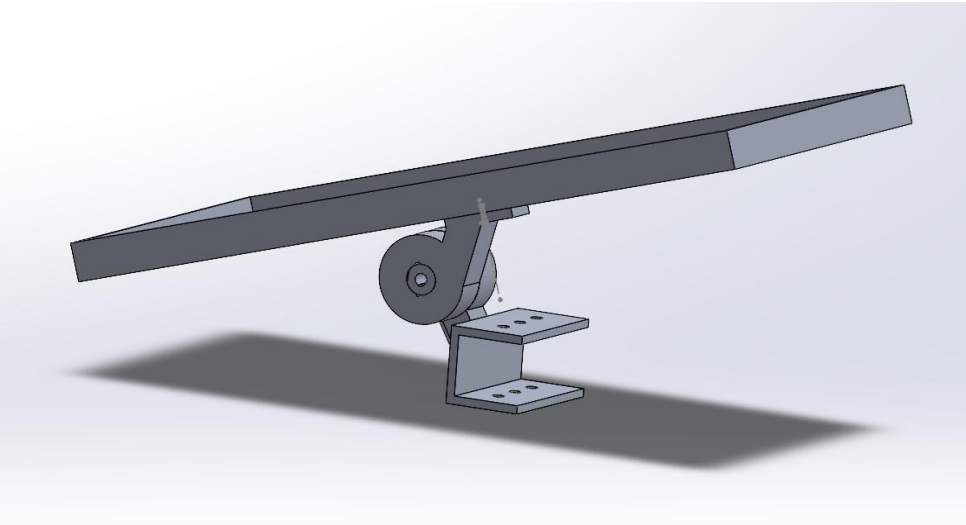

INITIAL CAD

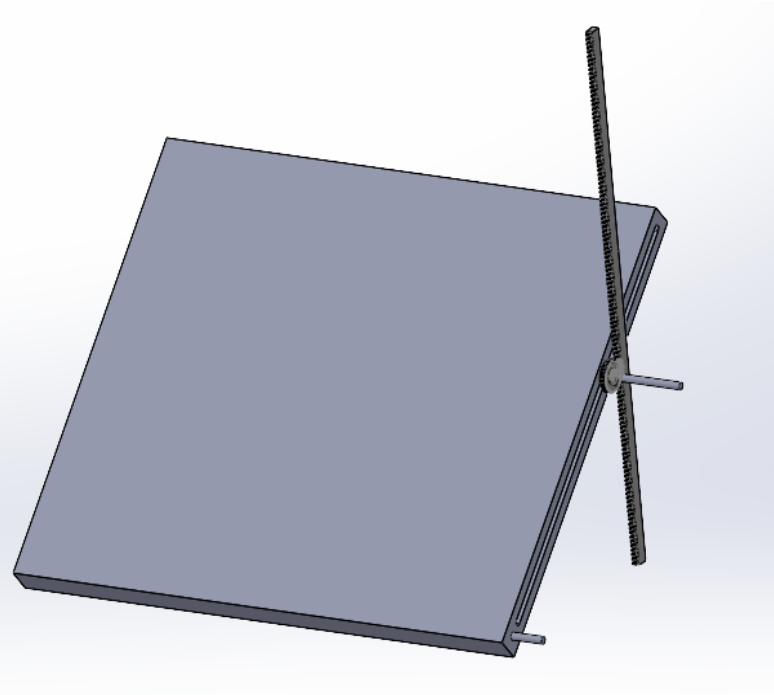

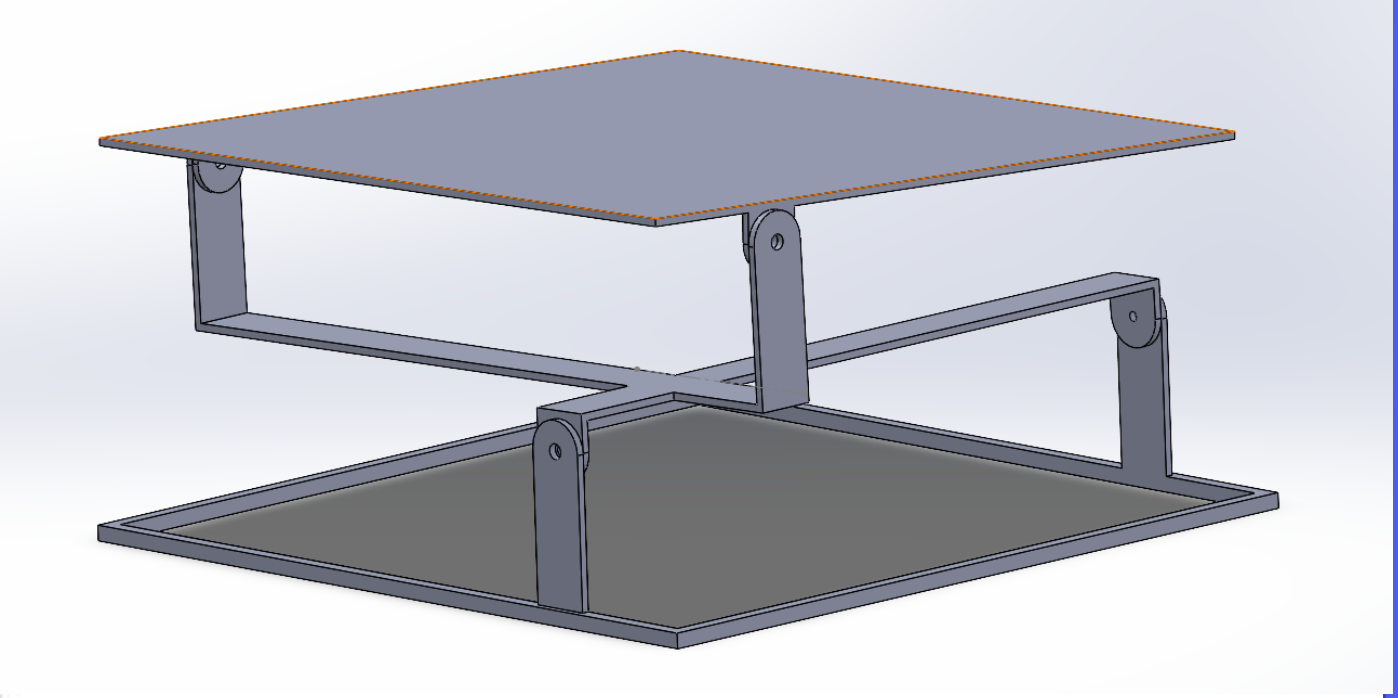

DECISION MATRIX

DESIGN CRITERIA	1-5; 5 being most ideal						IMPORTANCE
	Rack&Pinion	2-gear	arm	gimble	tripod gimble	medieval	MULTIPLIER
Servicability	4	4	5	3.5	1	4	2
Compactness	3	4.5	4	3	4	2	2
(can be) 2-axis (rate 3 for 1-axis)	2	3.5	4	5	5	2	3
Lasts 2-1/2 years (40 cycles)	5	5	5	5	3	5	2
Repeatability of Angles	5	5	5	5	3	4	2
Expected Resolution (1 deg ideal)	5	5	4	4.5	3.5	5	2
Amount of Custom Parts	4	4	3.5	3.5	4	5	1
Safety	3	4	3.5	3	3.5	2	3
WEIGHTED VALUES							
Simplicity	8	8	10	7	2	8	
Compactness	6	9	8	6	8	4	
(can be) 2-axis (rate 3 for 1-axis)	6	10.5	12	15	15	6	
Lasts 2-1/2 years (40 cycles)	10	10	10	10	6	10	
Data Acquisition Speed	10	10	10	10	6	8	
Expected Resolution (1 deg ideal)	10	10	8	9	7	10	
Amount of Unique Parts	4	4	3.5	3.5	4	5	
Safety	9	12	10.5	9	10.5	6	
TOTAL	63	73.5	72	69.5	58.5	57	
	Rack&Pinion	2-gear	arm	gimble	tripod gimble	medieval	

ITERATION

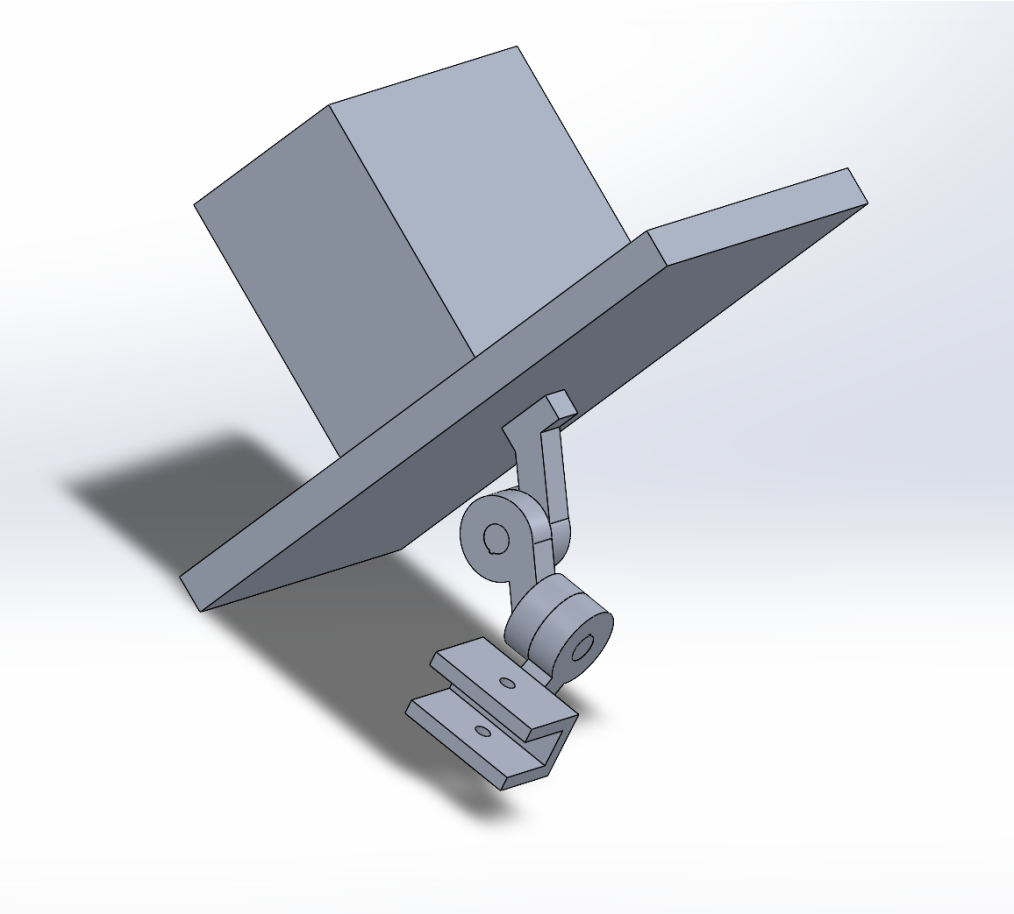

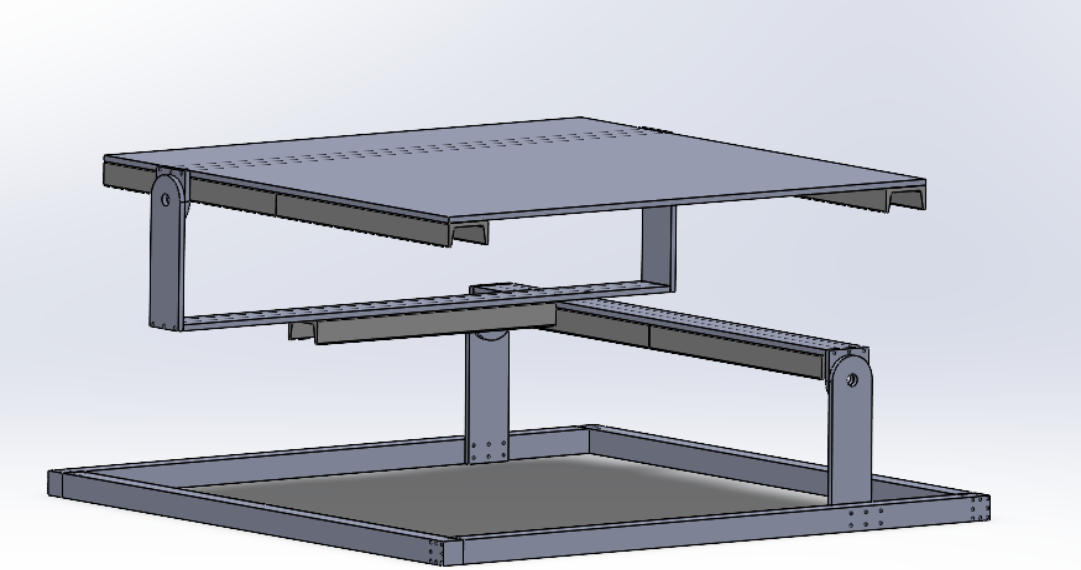

FINAL PICK (RE-EVALUATION)

DESIGN CRITERIA			IMPORTANCE
	arm	gimble	MULTIPLIER
Servicability	4	4	2
Compactness	**5**	**4**	2
Lasts 2-1/2 years (40 cycles)	4	4	2
Repeatability of Angles	3.5	3.5	2
Expected Resolution (1 deg ideal)	4	4	2
Amount of Custom Parts	**3**	**4.5**	1
Safety	**3**	**4**	3
WEIGHTED VALUES			
Simplicity	8	8	
Compactness	10	8	
Lasts 2-1/2 years (40 cycles)	8	8	
Data Acquisition Speed	7	7	
Expected Resolution (1 deg ideal)	8	8	
Amount of Unique Parts	3	4.5	
Safety	9	12	
TOTAL	53	55.5	
	arm	gimble	

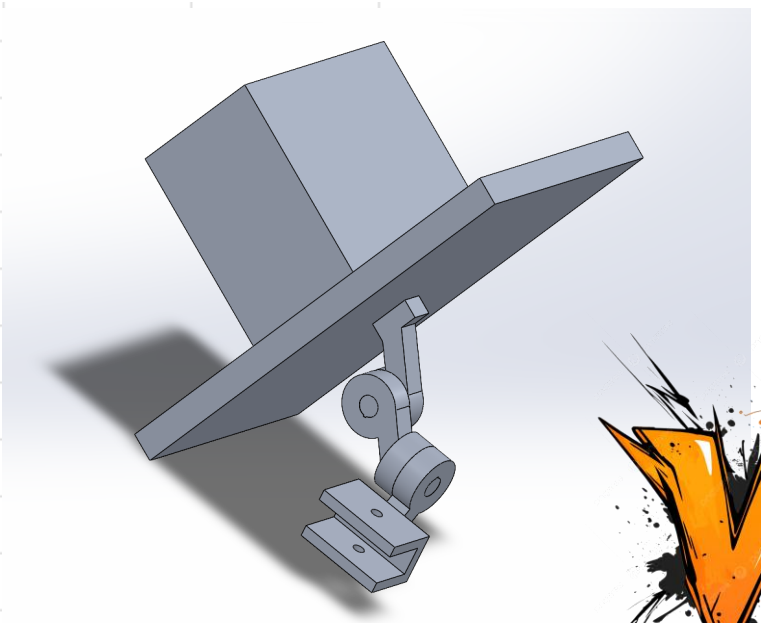

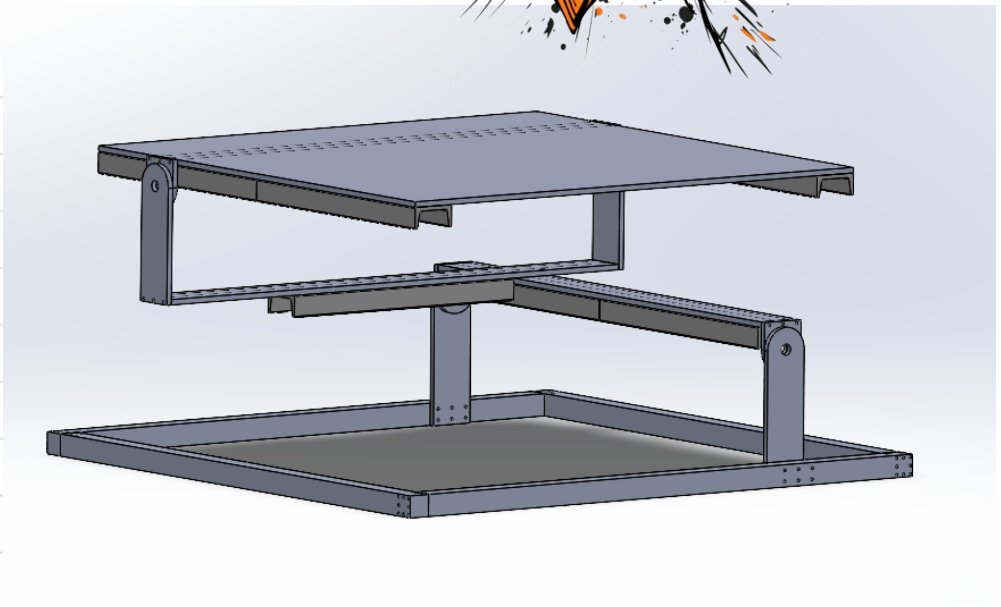

RESULTS

FINAL PICK

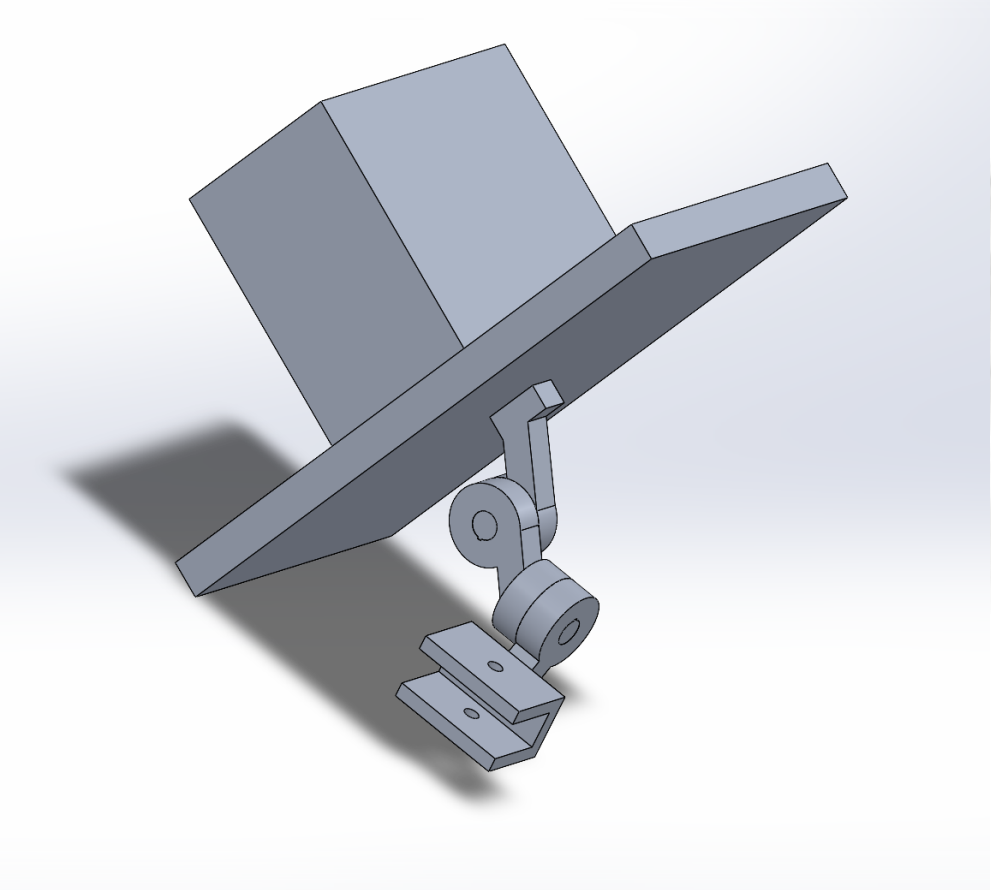

DESIGN ENHANCEMENT

IMPROVEMENT

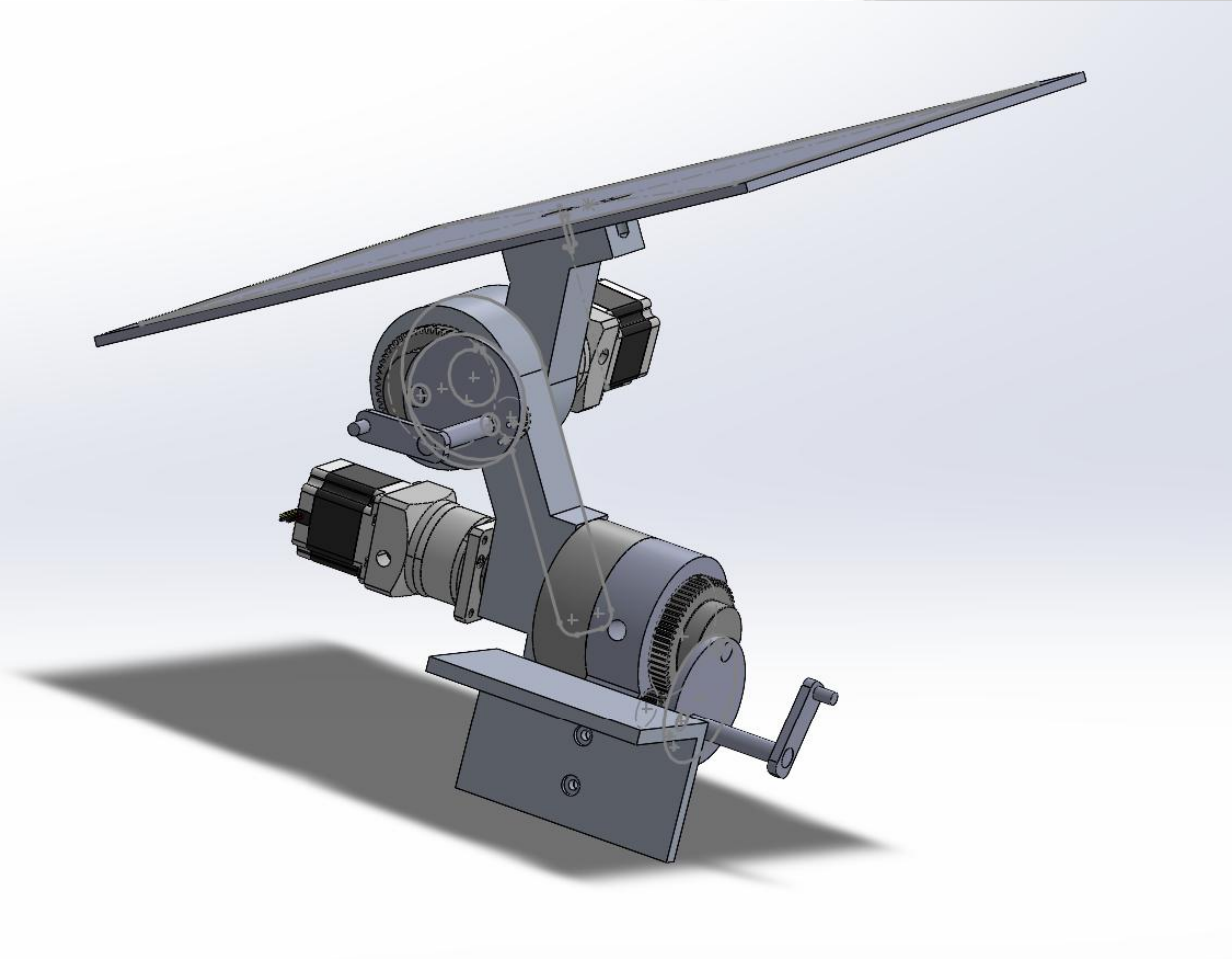

- NEMA 23 high torque stepper motors
- Planetary gearbox, EMF brake
- Manual gearing
- Streamlined table clamp

CLAMP DESIGN

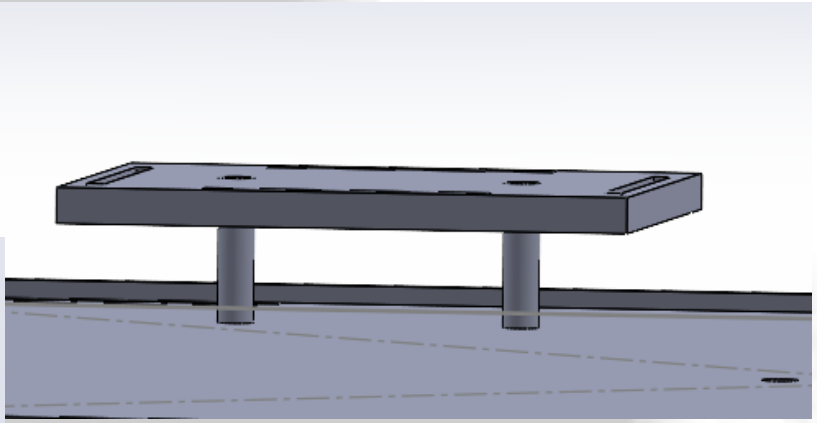

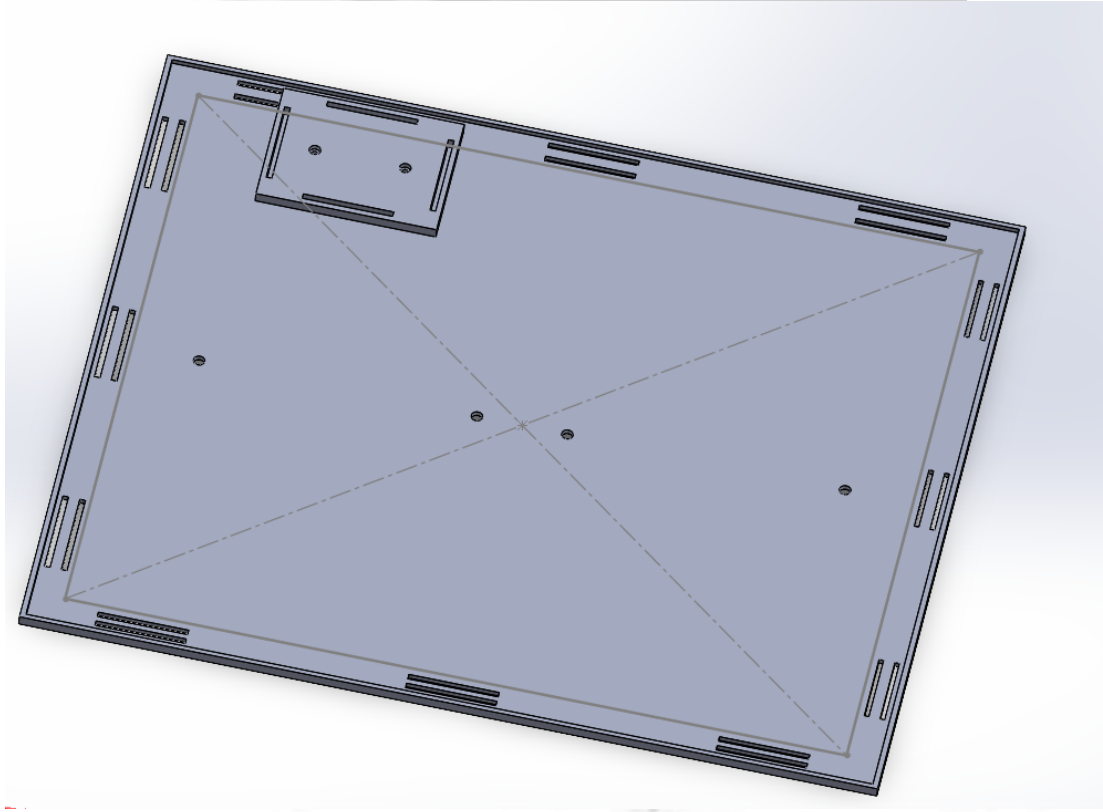

THANK YOU

Questions?